mapol
Elišky Přemyslovny 1343
156 00 Praha 5, mapol@iol.cz
tel: +420 257 921 545, fax: +420 257 921 659

ФЕТТИЧЕСКИЕ МЕМБРАННЫЕ КЛАПАНЫ ТИП 385 с пневмоприводом

ДУ 15 - 80

ОПИСАНИЕ

- мембранный клапан с пневмоприводом
- компактная конструкция
- гладкая поверхность легко опаласкивается водой
- [illegible]
- [illegible]

[illegible] (MM)

DN	MA	L	L1	H1	H2	H3	H4	D
15 - 25	25	25	120	130	49	31	97	130
32 - 40	40	25	153	176	77	31	131	161
50	50	30	173	214	91	31	161	217
65	80	30	216	269	121	41	229	265
80	80	30	254	321	121	41	278	265

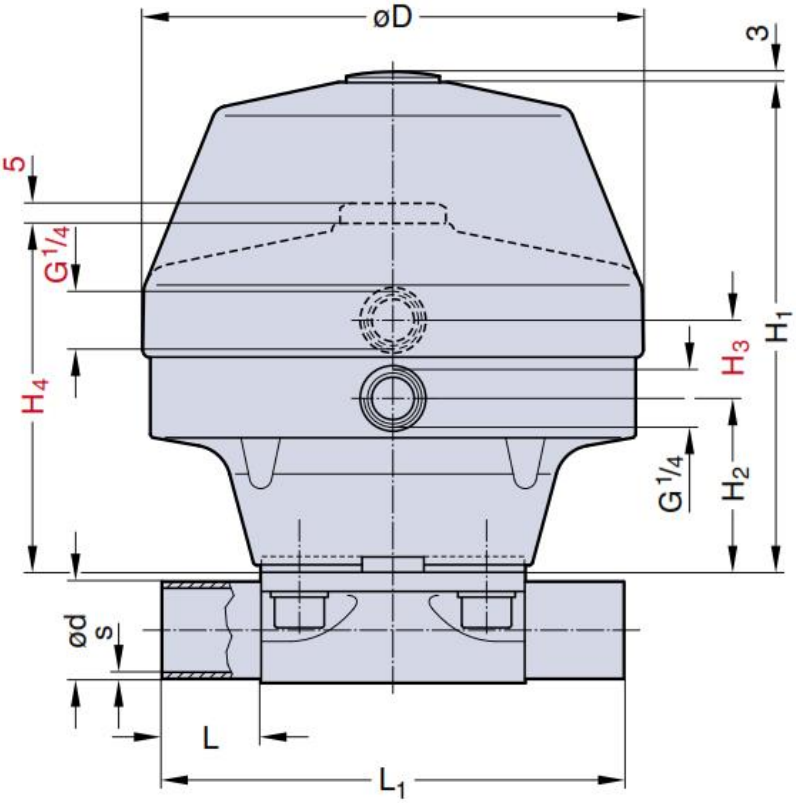

ДУ 385

[illegible]

- **[illegible]:**
  [illegible]
  [illegible]
  [illegible]
- **[illegible]:**
  [illegible] 15-50
  [illegible] EPDM 10 [illegible]
  [illegible] PTFE 8 [illegible]
  [illegible] 65-80
  [illegible] EPDM [illegible] 7 [illegible]
  [illegible] PTFE [illegible] 6 [illegible]
- **[illegible]:**
  [illegible] 15-50 4,5 - 6 [illegible]
  [illegible] 65-80 4,5 - 7 [illegible]
- [illegible]: [illegible], Clamp, [illegible]

[illegible]

- **[illegible]:**
  EPDM [illegible] PTFE
- **[illegible]**
  [illegible] 1.4435/316L
  [illegible] 1.4435/316L
  [illegible]